CML Microcircuits
COMMUNICATION SEMICONDUCTO

High Resolution Circuit Diagrams for PE0302-865A

Complementary to CML User Manual: UM/0302/1 December 2014

© 2014 CML Microcircuits UK Ltd.

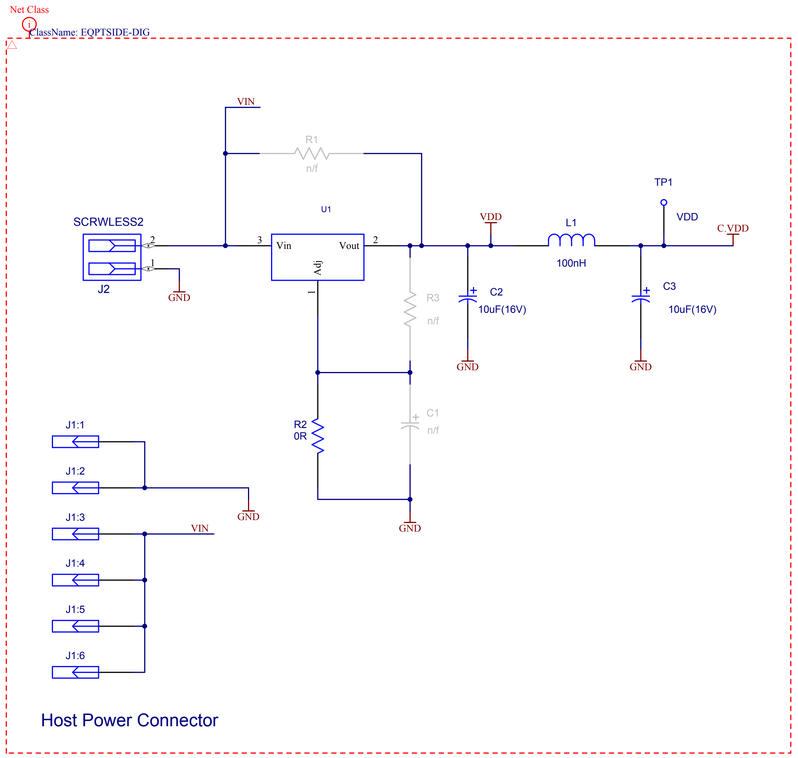

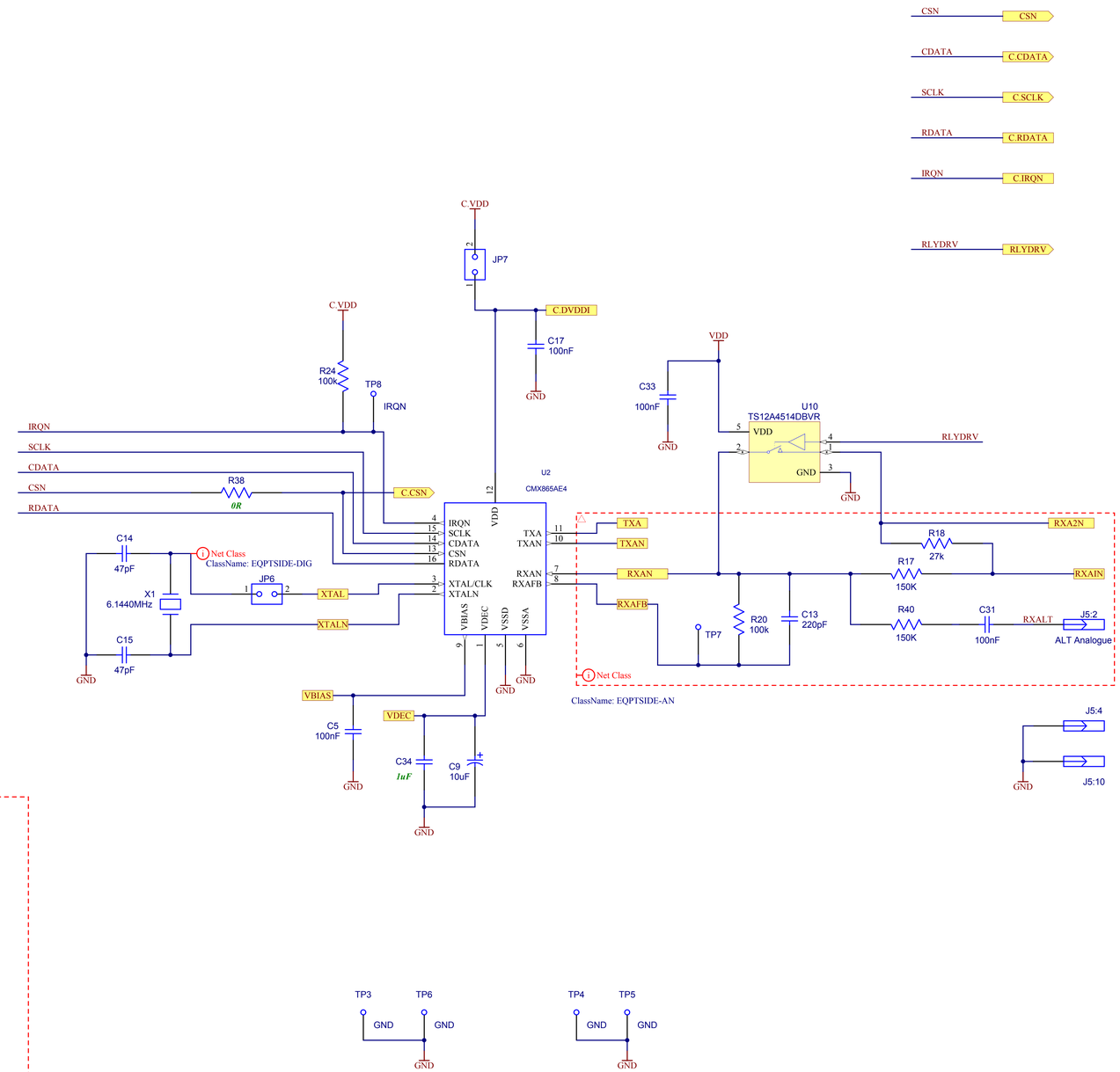

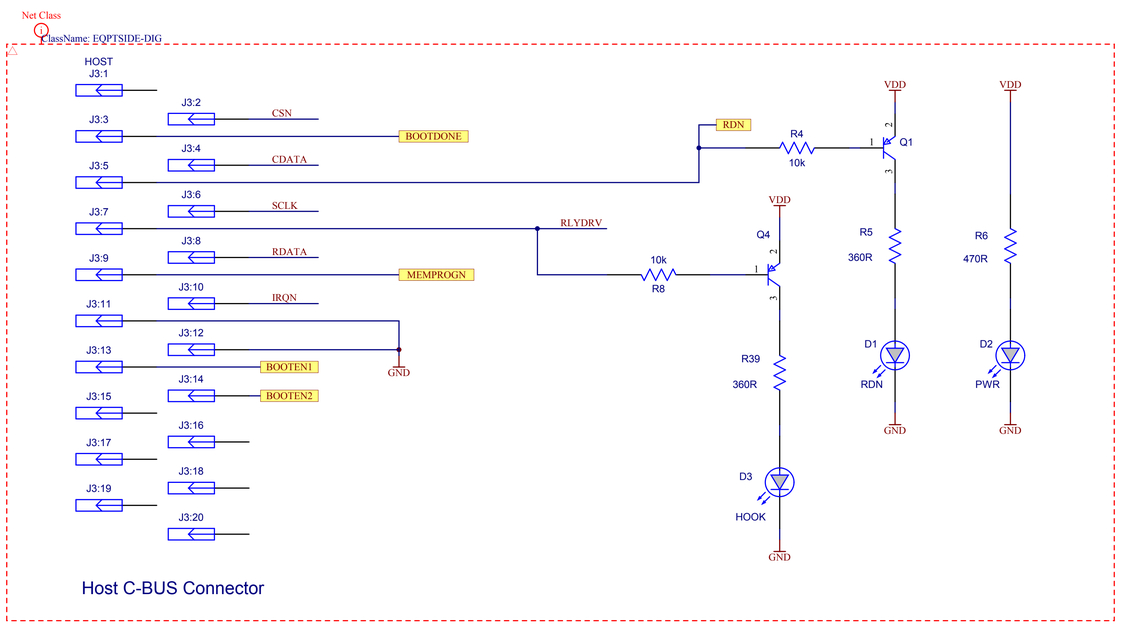

PE0302-865A, Sheet 1

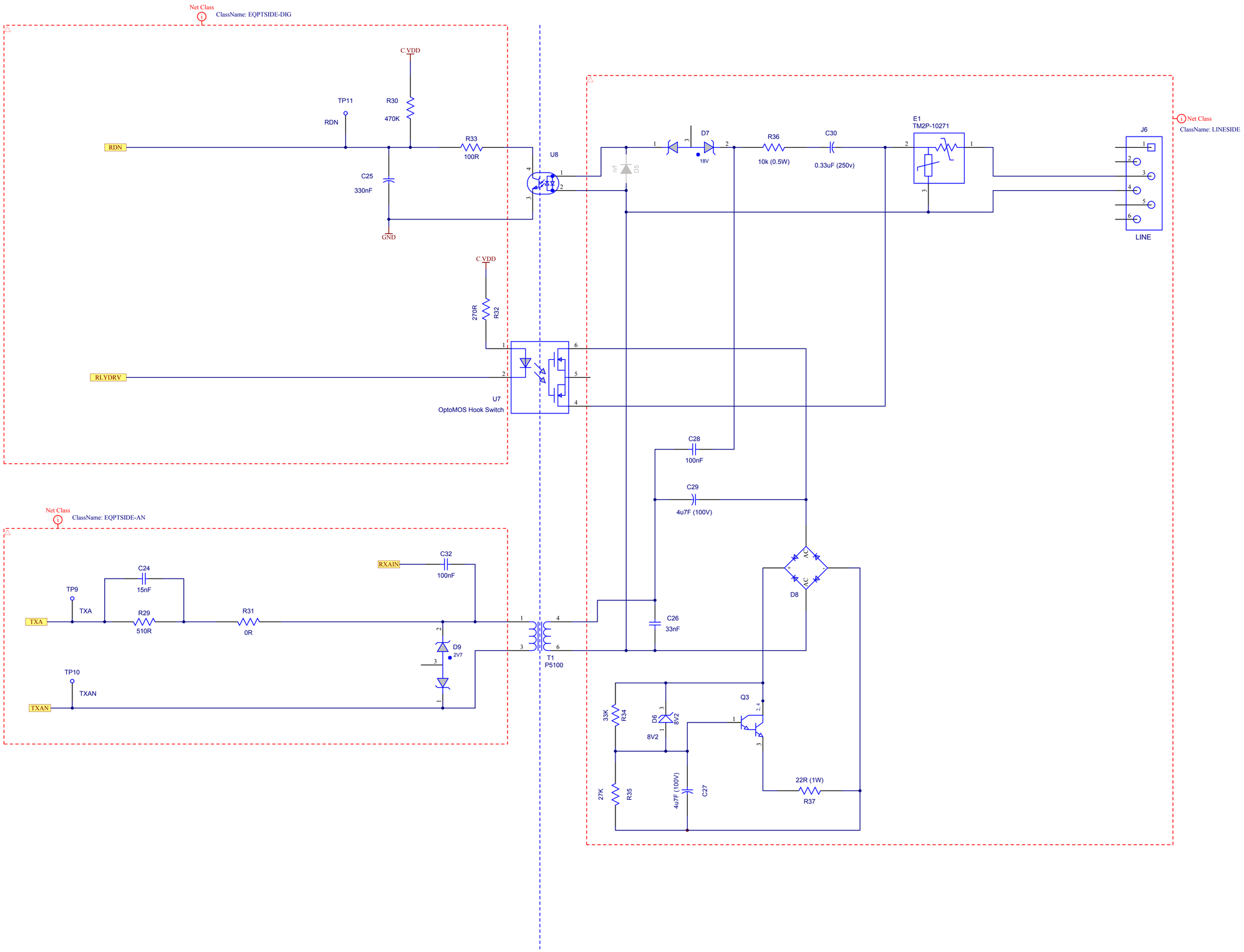

PE0302-865A, Sheet 2