High Resolution Circuit Diagrams for EV9942EF_A02

© 2026 CML Microcircuits UK Ltd

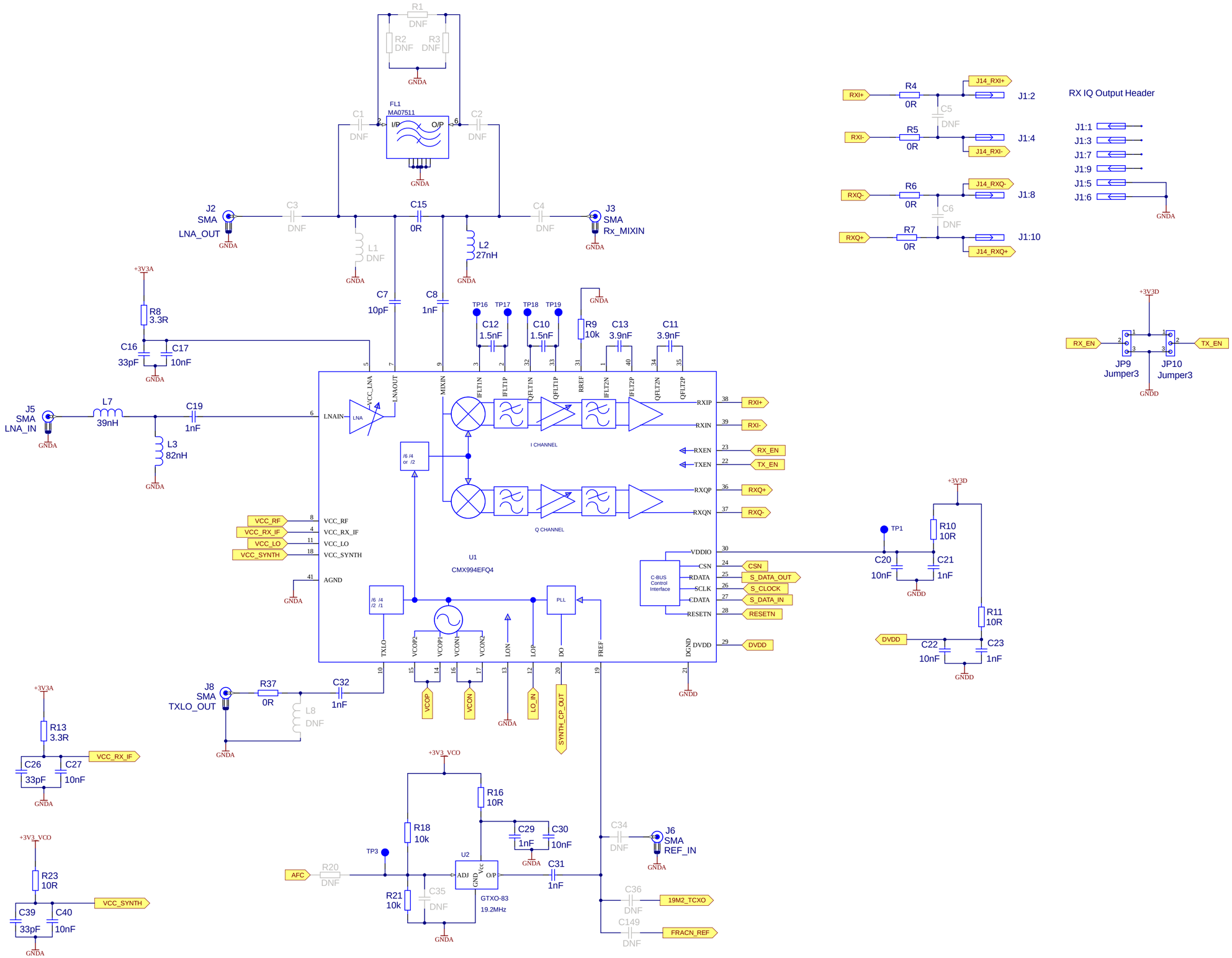

EV9942EF, Sheet 1

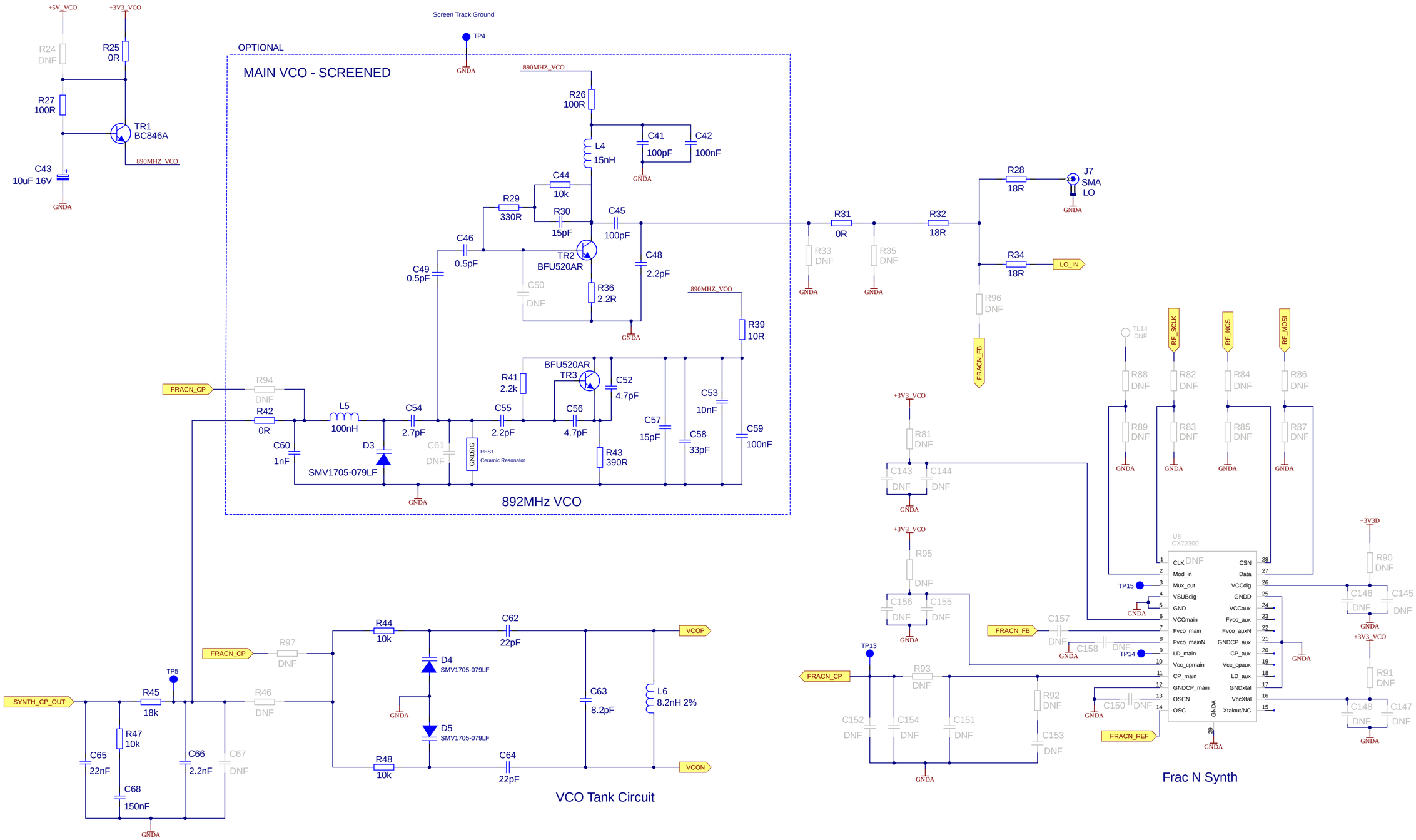

EV9942EF, Sheet 2

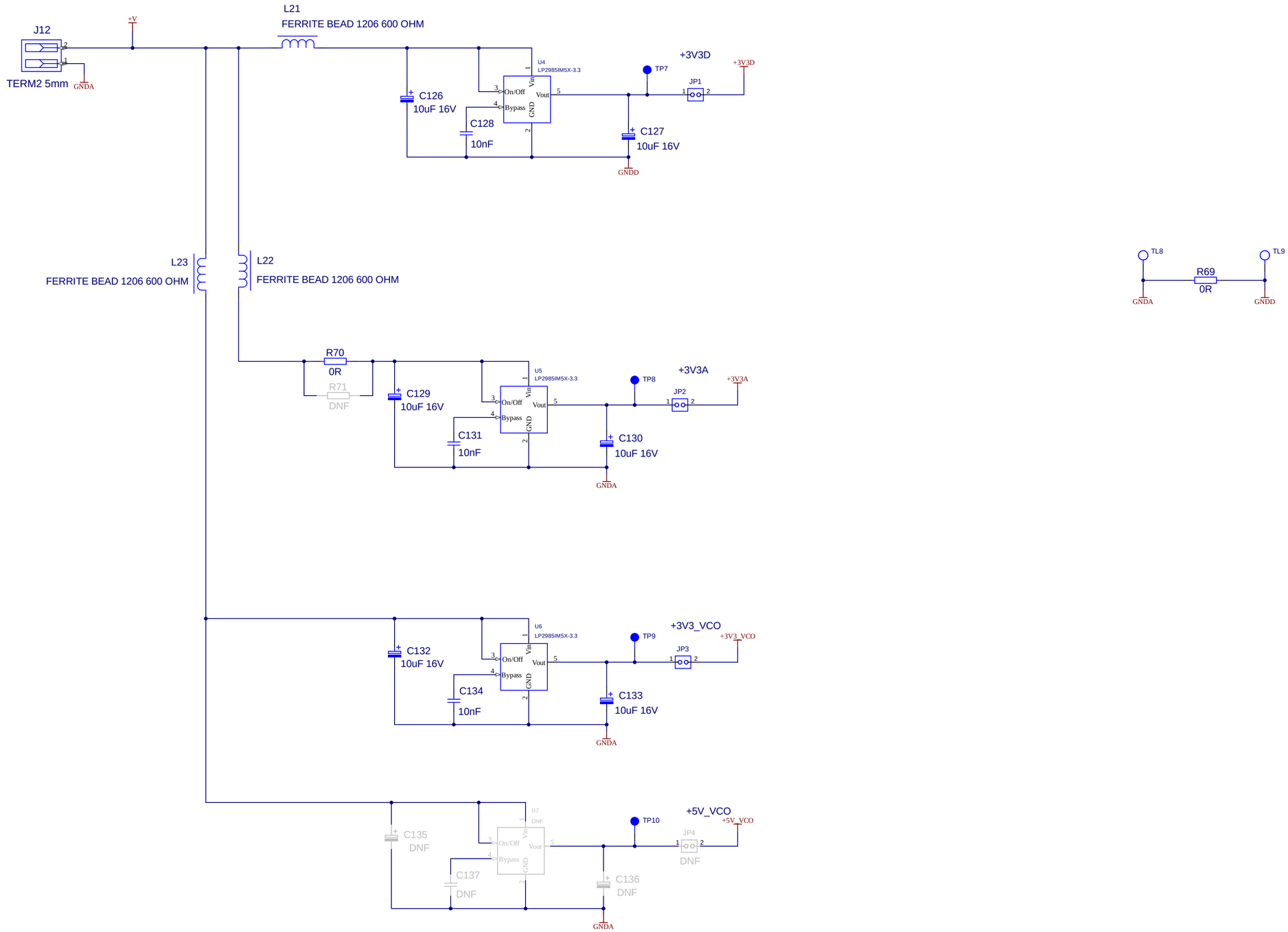
J12
TERM2 5mm
+V
GNDA
L21
FERRITE BEAD 1206 600 OHM
C126
10uF 16V
C128
10nF
U4
LP2985IM5X-3.3
On/Off
Bypass
Vin
Vout
GND
TP7
+3V3D
JP1
C127
10uF 16V
GNDD
L23
FERRITE BEAD 1206 600 OHM
L22
FERRITE BEAD 1206 600 OHM
R70
0R
R71
DNF
C129
10uF 16V
C131
10nF
U5
LP2985IM5X-3.3
TP8
+3V3A
JP2
C130
10uF 16V
GNDA
C132
10uF 16V
C134
10nF
U6
LP2985IM5X-3.3
TP9
+3V3_VCO
JP3
C133
10uF 16V
GNDA
C135
DNF
C137
DNF
U7
DNF
TP10
+5V_VCO
JP4
DNF
C136
DNF
GNDA
TL8
TL9
R69
0R
GNDA
GNDD

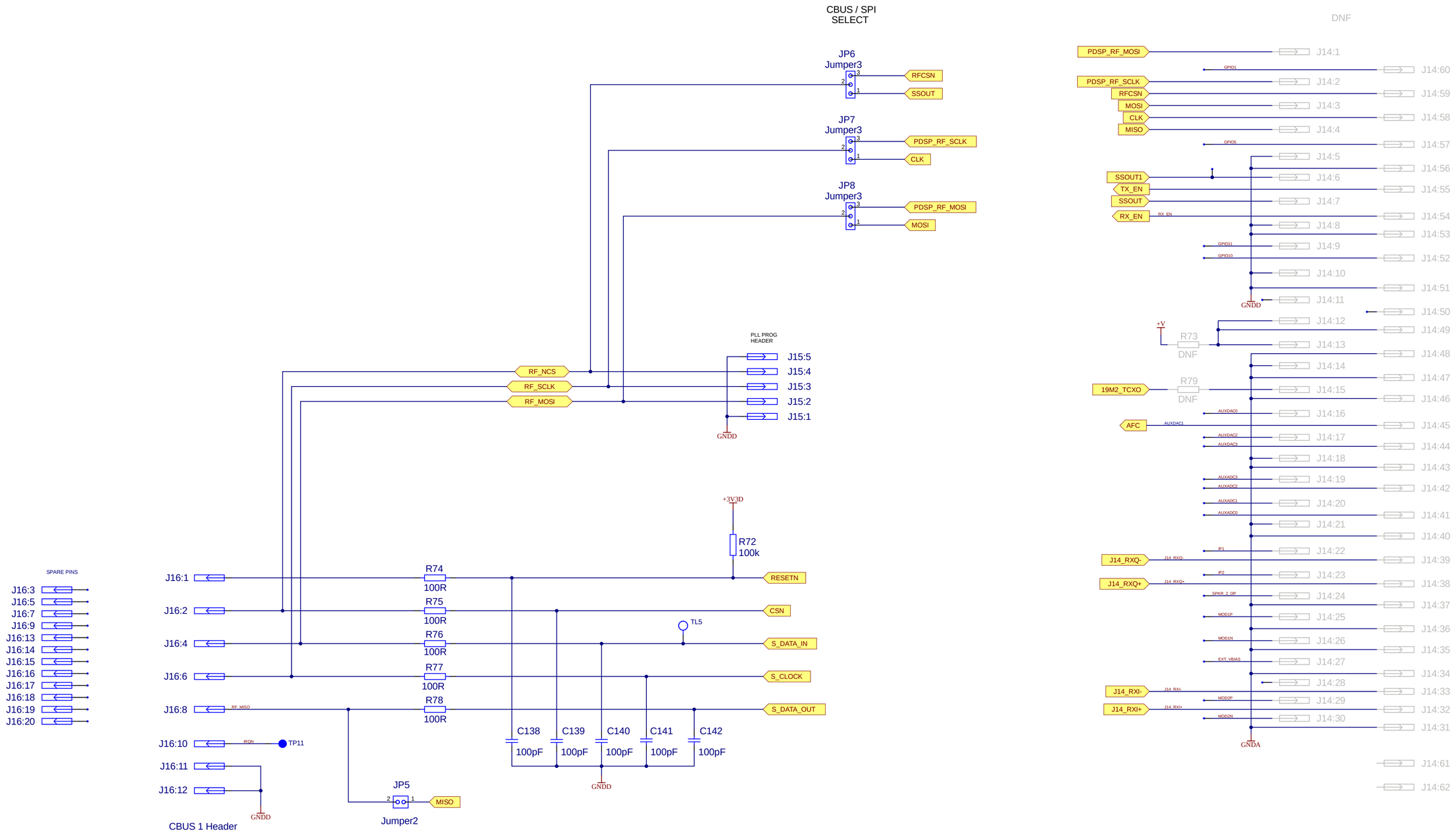

EV9942EF, Sheet 4